MEMORANDUM NO. 4

January 16, 1968

P. B. Akin	W. Kunes	J. Jackson	L. Hazelip
R. W. Richards	F. Hacke	E. G. Johnson	R. Wedler
H. R. Kilpatrick	J. Guyer (2)	T. Collins	G. Vaughan
R. B. Dennis	J. Korilko	E. Jaschek	H. Kamper
A. C. Weber	A. H. Becker	J. McCammon	J. Paul
E. L. Bockstruck	H. Meyer	W. Davis	L. Troeckler
W. A. Peters	M. Hardaway	R. Uhrig (2)	R. D. Bay
H. Hillmer	C. Crutcher	R. S. Turner	Files
L. Will	E. Phillips	W. C. Schweer	

E. L. BOCKSTRUCK
H. R. KILPATRICK
E. G. JOHNSON
W. DAVIS

CONTRACT WTC-221.00
WORLD TRADE CENTER
THE PORT OF NEW YORK AUTHORITY
LACLEDE CONTRACT 67-J-31801

Reference is made to memoranda #1, 2, and 3 dated January 9 and 10, 1968.

Attached to these memoranda were 5 drawings which detailed and specified angle sections peculiar to the World Trade Center Contract. The chemistries stated thereon were in error.

This memorandum distributes the following revised drawings:

Drawing No.	Title	Revised Date
F3-r-302	Special Angles Type 15 & 16	1-15-68
F3-r-303	Special Angles Type 20 & 21	1-15-68
F3-r-304	Special Angle Type 25	1-15-68
F3-r-305	Special Angle Type 30	1-15-68
F3-r-306	Special Angle Type 35	1-15-68

Please destroy the superceded standards.

Robert D. Bay

sak

2002-NOV-20

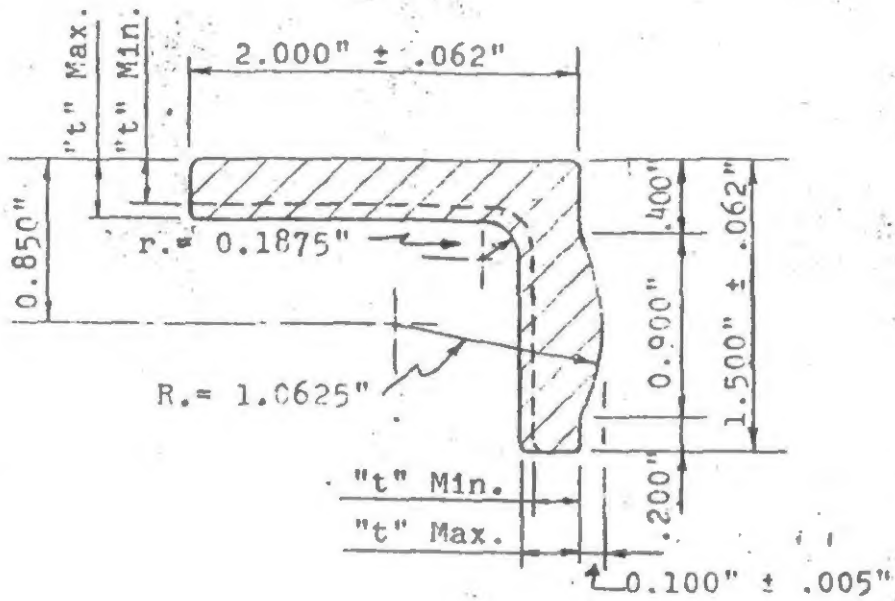

HOT ROLLED BULB ANGLE

Designation	Angle Size (Inches)	Thickness "t" (Inches)	Weight (Lbs/Ft)	Area (Sq.Ins.)
15	2 x 1½	.250 ± .012	2.99	0.881
16	2 x 1½	.310 ± .012	3.59	1.057

SPECIFICATIONS

Tolerance - 2-1/2% by weight
Grade - A-242 50,000 psi minimum yield strength

Chemistry - Carbon 22 Maximum
Manganese 100 Maximum
Squareness of Legs - 90° ±1-1/2°

LACLEDE STEEL COMPANY ST. LOUIS, MISSOURI	CLASS: Standards Steel Truss	DATE 3-1-67
Steel Truss Angle Sections		REV. 1-15-68
(Special Angles Type 15 and 16)		FILE
ENGINEERING DEPARTMENT J.H.P.	APPROVED [illegible]	DRAWING [illegible]

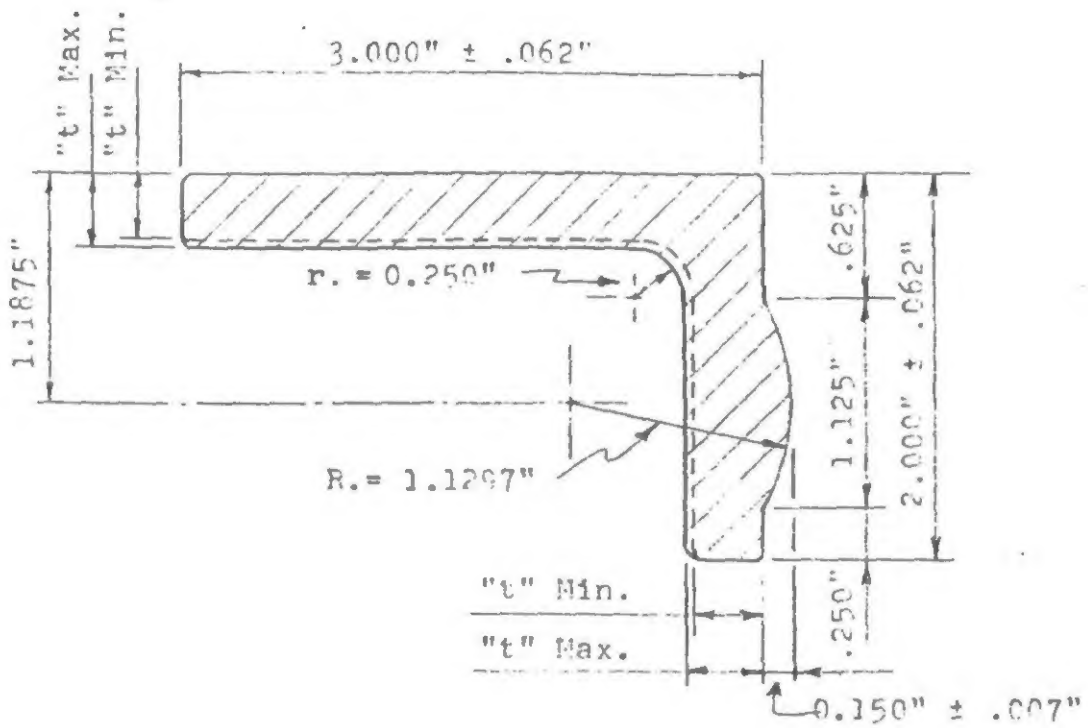

HOT ROLLED BULB ANGLE

Designation	Angle Size (Inches)	Thickness "t" (Inches)	Weight (Lbs/Ft)	Area (Sq.Ins.)
20	3 x 2	.330 ± .012	5.67	1.669
21	3 x 2	.370 ± .012	6.26	1.841

SPECIFICATIONS

Tolerance - 2-1/2% by weight
Grade - A-36 - 36,000 psi minimum yield strength
Chemistry - Carbon .28 Maximum
Manganese .60 Maximum
Squareness of legs - 90° ± 1-1/2°

LACLEDE STEEL COMPANY ST. LOUIS, MISSOURI	CLASS: Standards — Steel Truss	DATE 3-1-67 REV. 1-15-68 FILE
Steel Truss Angle Sections (Special Angles Type 20 and 21)		
ENGINEERING DEPARTMENT JRP	APPROVED RDB	DRAWING [illegible]

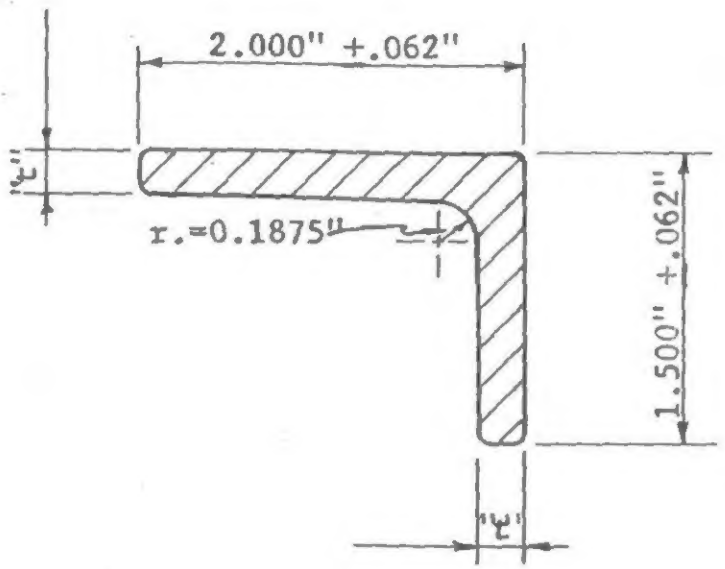

HOT ROLLED PLAIN ANGLE

Designation	Angle Size (Inches)	Thickness "t" (Inches)	Weight (Lbs/Ft)	Area (Sq.Ins.)
25	2 x 1-1/2	.250 ±.012	2.77	0.81

SPECIFICATIONS

Tolerance - 2-1/2% by weight
Grade - A-36 - 36,000 psi minimum yield strength

Chemistry - Carbon .28 Maximum
Manganese .60 Maximum
Squareness of Legs - $90^{o} \pm 1\text{-}1/2^{o}$

LACLEDE STEEL COMPANY ST. LOUIS, MISSOURI	CLASS: Standards Steel Truss	DATE 1-5-68 REV. 1-15-68 FILE
Steel Truss Angle Section (Special Angle Type 25)		
ENGINEERING DEPARTMENT JRP	APPROVED RDB	DRAWING R-[illegible]-104

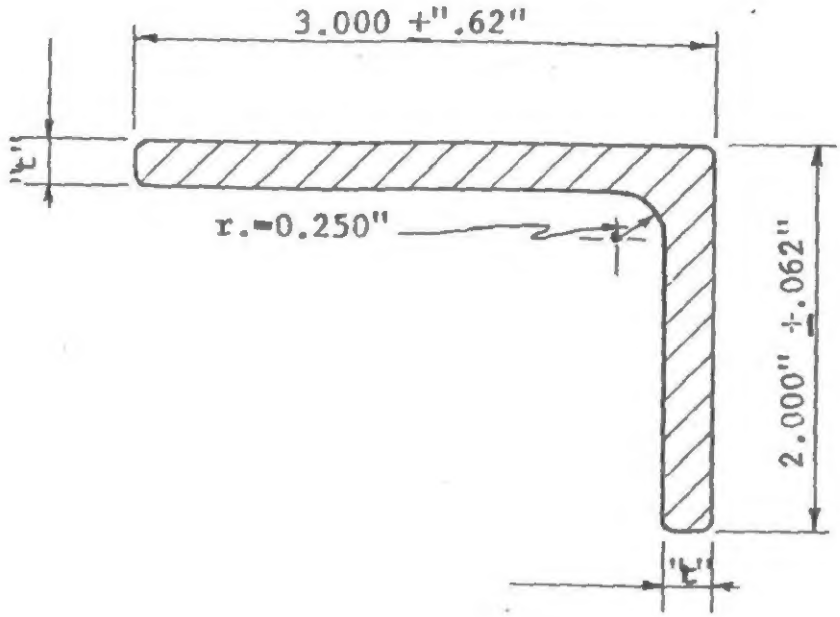

HOT ROLLED PLAIN ANGLE

Designation	Angle Size (Inches)	Thickness "t" (Inches)	Weight (Lbs/Ft)	Area (Sq. Ins.)
30	3 x 2	.250 ±.012	4.1	1.19

SPECIFICATIONS

Tolerance - 2-1/2% by weight
Grade - A-242 50,000 psi minimum yield strength

Chemistry - Carbon .22 Maximum
Manganese 1.00 Maximum
Squareness of Legs - 90° ±1-1/2°

LACLEDE STEEL COMPANY ST. LOUIS, MISSOURI	CLASS: Standards Steel Truss	DATE 1-5-68 REV. 1-15-68 FILE
Steel Truss Angle Section (Special Angle Type 30)		
ENGINEERING DEPARTMENT JRP APPROVED RDB		DRAWING

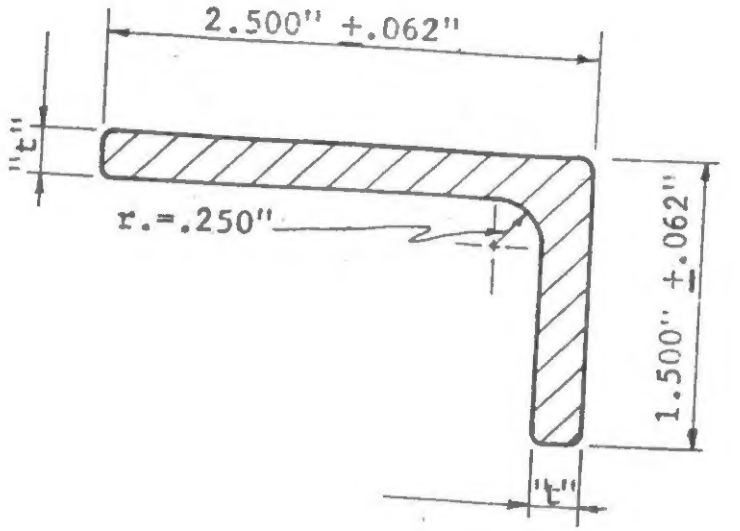

HOT ROLLED PLAIN ANGLE

Designation	Angle Size (Inches)	Thickness "t" (Inches)	Weight (Lbs/Ft)	Area (Sq. Ins.)
35	2½ x 1½	.250 ±.012	3.19	0.94

SPECIFICATIONS

Tolerance - 2-1/2% by weight
Grade - A-36 36,000 psi minimum yield strength
Chemistry - Carbon 28 Maximum
Manganese 60 Maximum

Squareness of Legs - 90° ±1-1/2°

LACLEDE STEEL COMPANY ST. LOUIS, MISSOURI	CLASS: Standards Steel Truss	DATE 1-5-68 REV. 1-15-68 FILE
Steel Truss Angle Section (Special Angle Type 35)		
ENGINEERING DEPARTMENT JRP APPROVED RDB		DRAWING 306